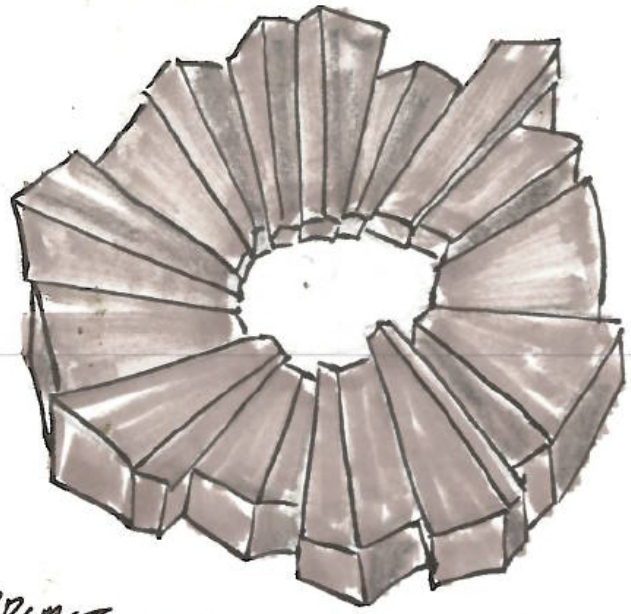

STARBURST "SLOW EXPLOSION"

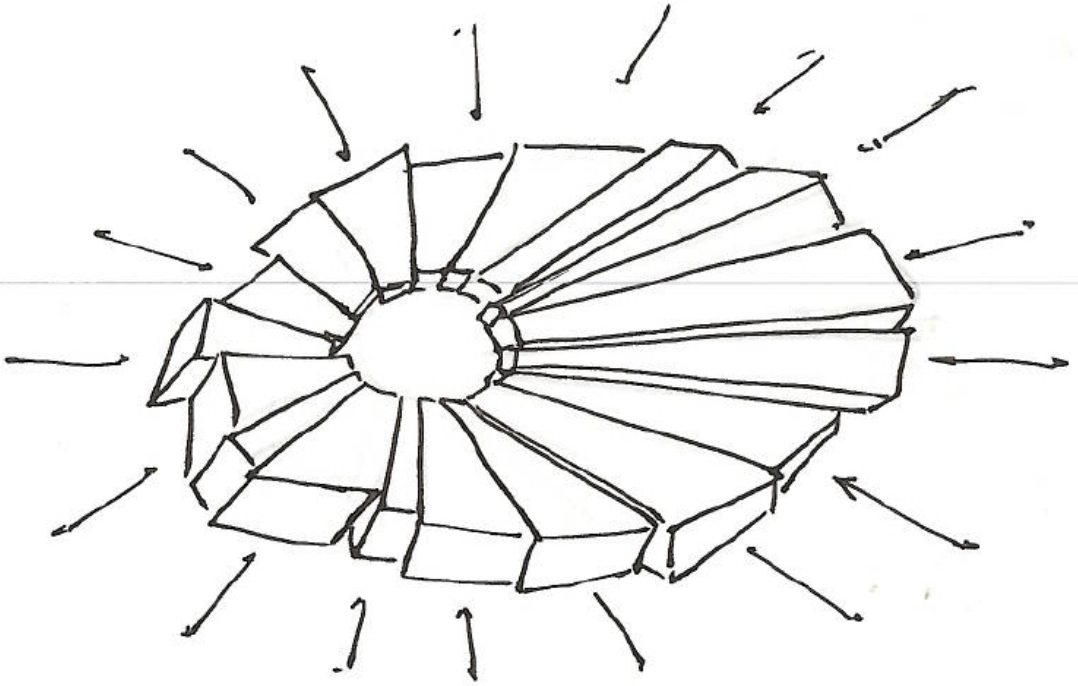

THE INDIVIDUAL PLATES / ANGLES MOVE BACK AND FORTH

Copyright Alex / Mechanicalcloud

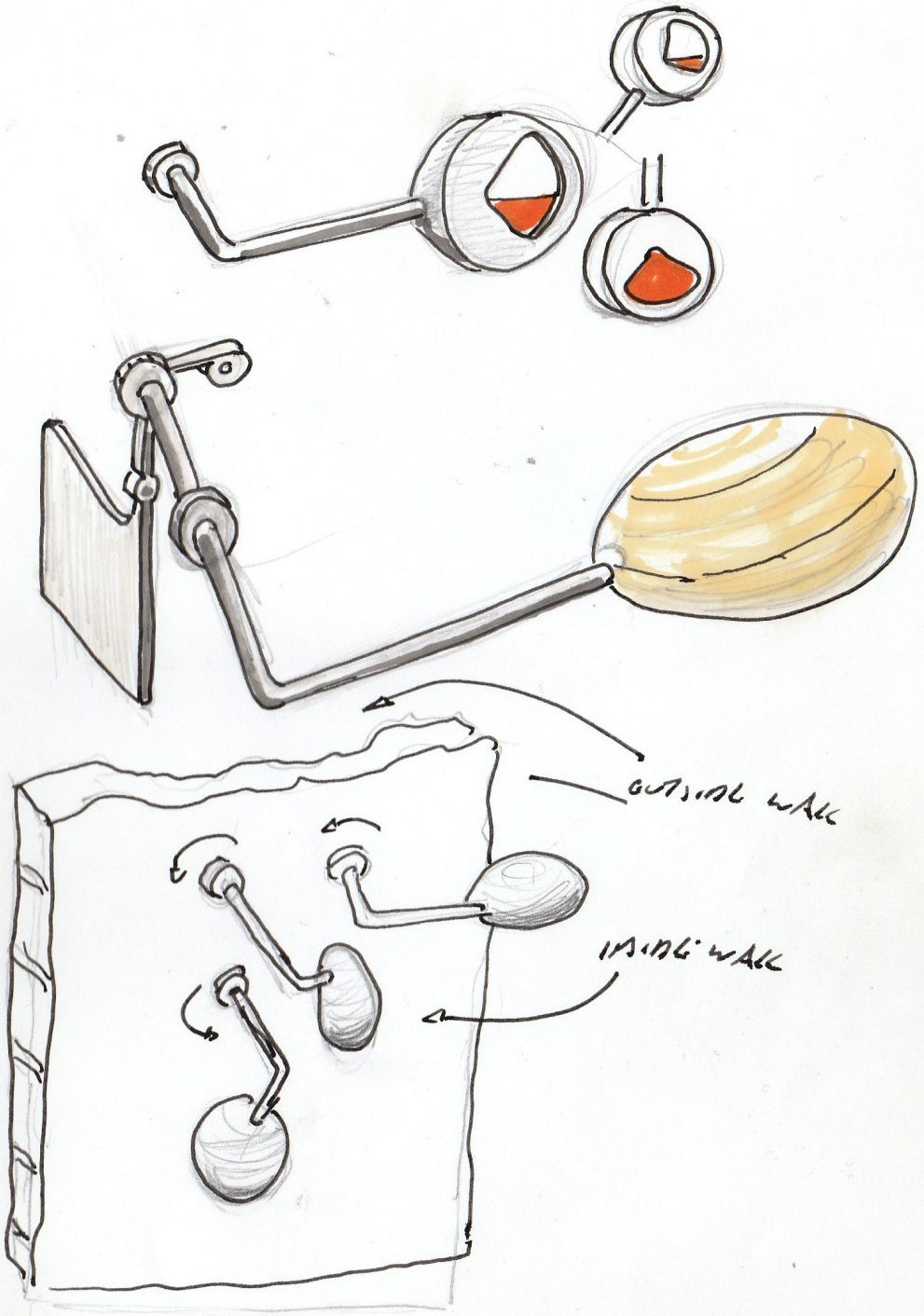

WIND GUST DRIVEN RATCHET SYSTEM

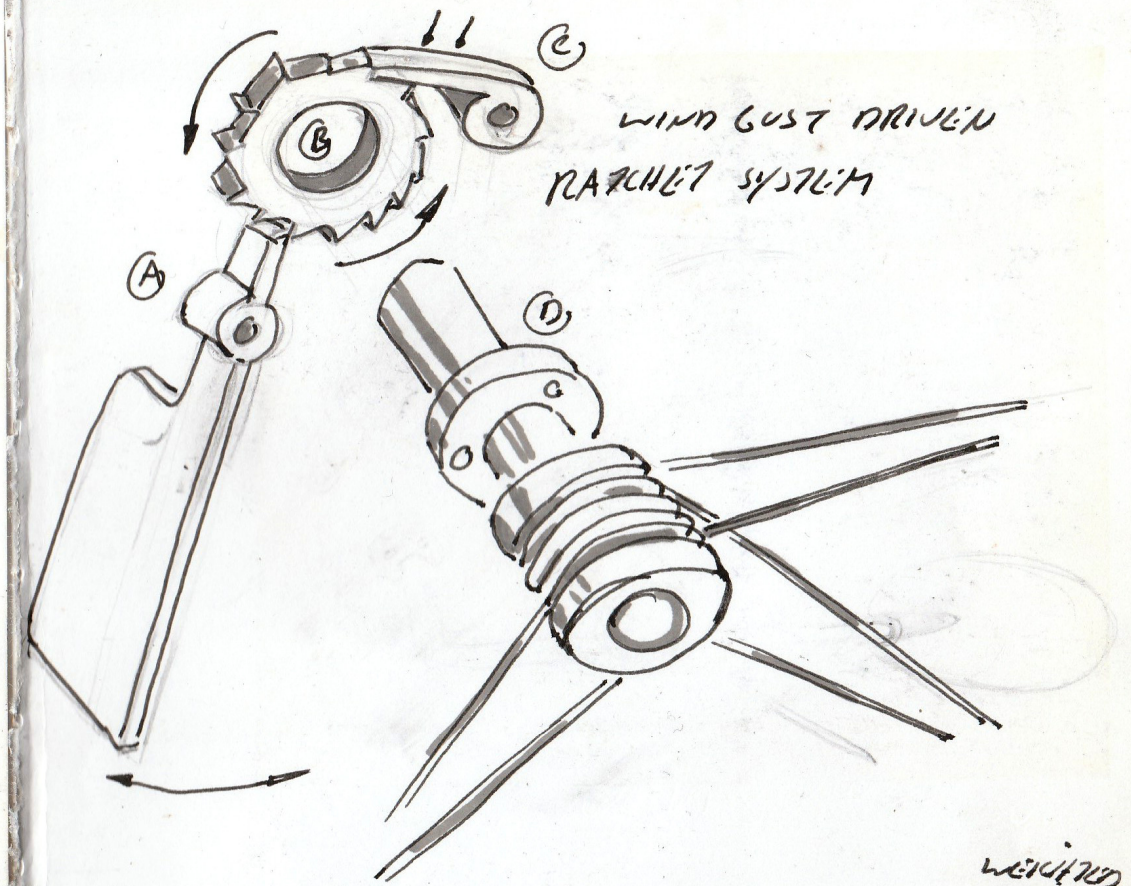

WEIGHTED

1. A GUST OF WIND BLOWS AGAINST FIN
2. IT MOVES TO AND FRO ON AXIS (A)
3. THE TOOTHED "PALLIEL" TURNS ANTI-CLOCKWISE
4. THE MOVEMENT CAPTURED BY (C) SPRUNGED OR WEIGHTED
5. (D) TURNS ANTI-CLOCKWISE, DRIVES BELTS

CAN BE USED TO DRIVE ANYTHING

Copyright Alex / MechanicalCloud

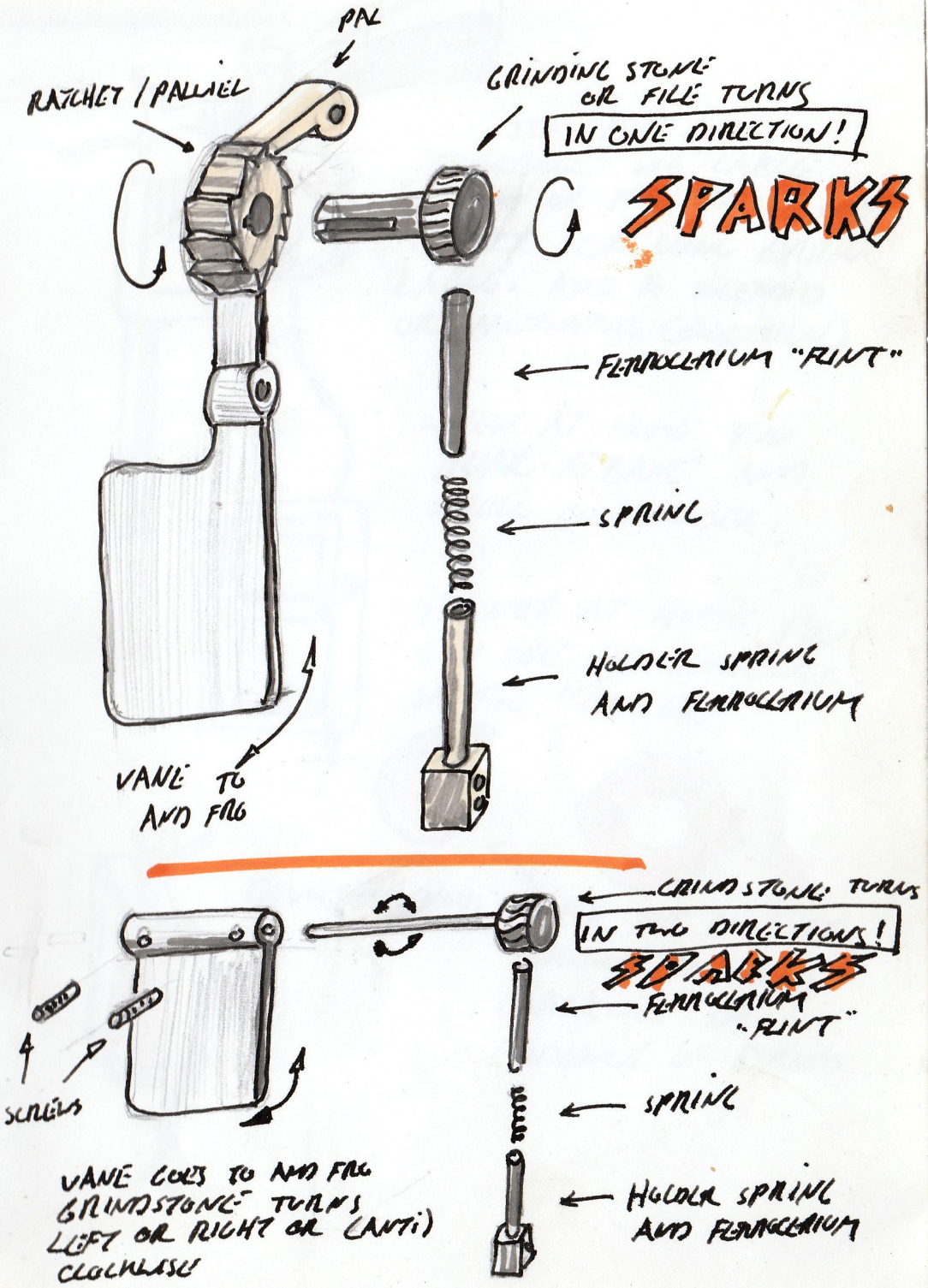

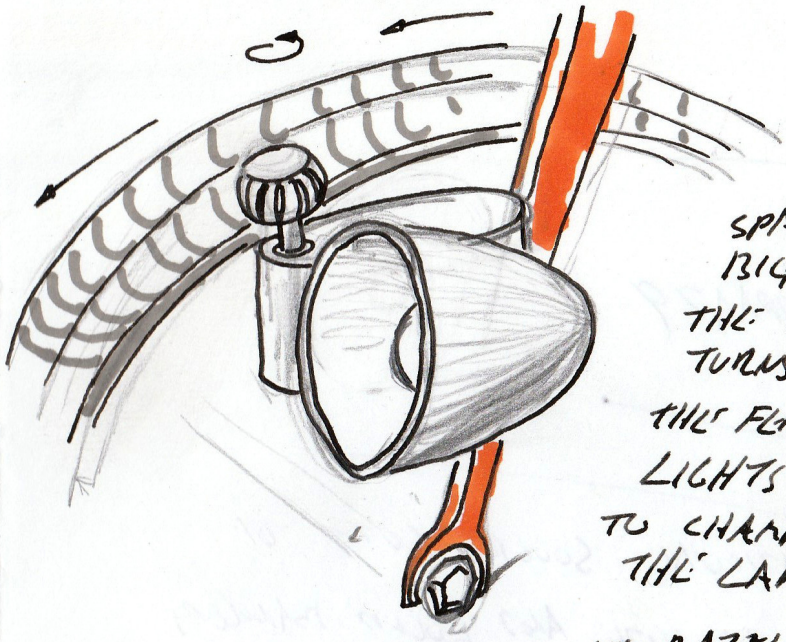

SPARK BICYCLE LIGHT

THE DYNAMO PART TURNS A "GRINDSTONE"

THE FERROCERIUM LIGHTS THE LAY TO CHAMPAGNE AT THE LANE.

NO BATTERIES OR CABLES REQUIRED!

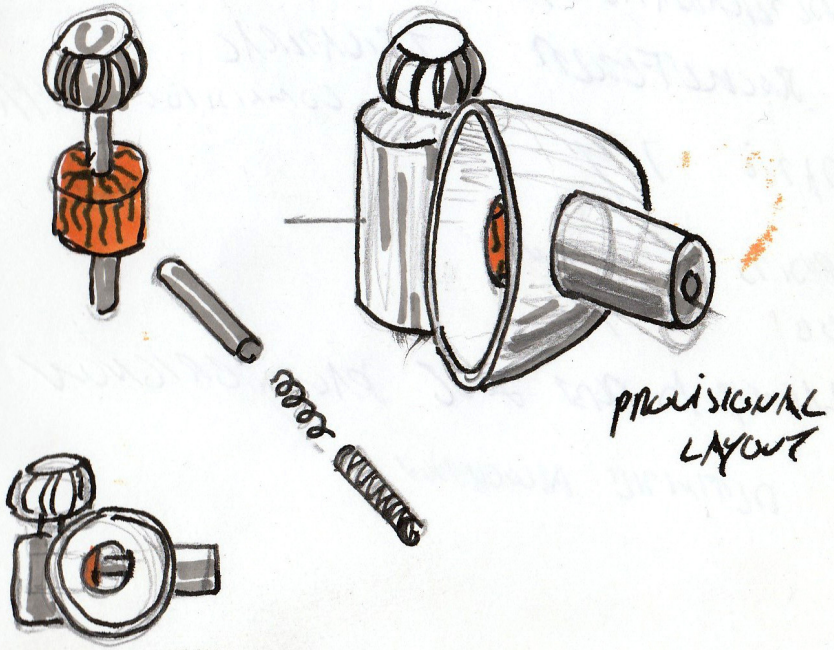

PROVISIONAL LAYOUT

Copyright Alex / MechanicalCloud

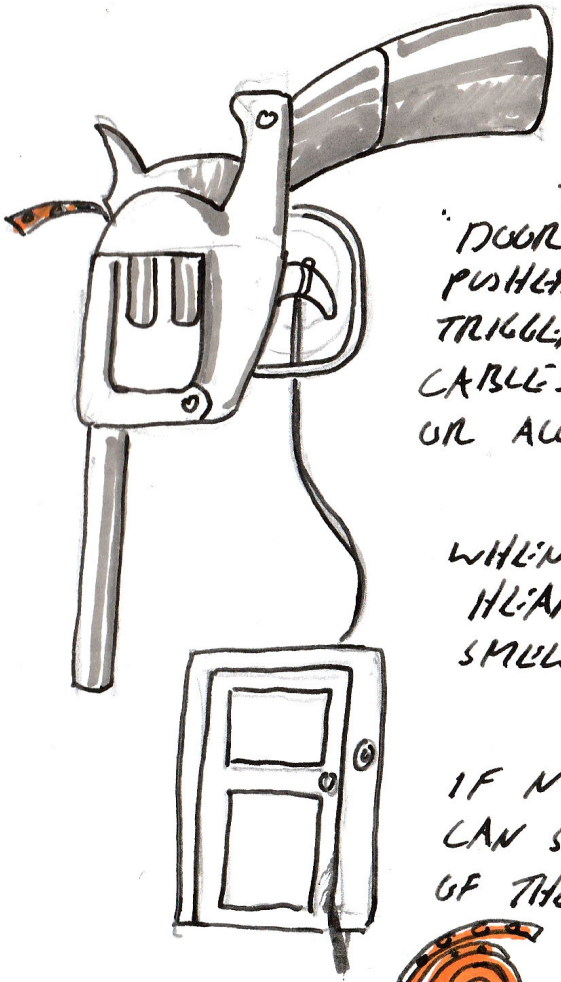

TOY "POP" GUN "DOORBELL" VIA CABLE PUSHED OR PULLED ON THE TRIGGER OR USING EXISTING CABLES AND A SOLENOID OR ACTUATOR (ELECTRICAL)

WHEN AT HOME YOU HEAR A "BANG" AND SMELL GUNPOWDER

IF NOT AT HOME YOU CAN SEE THE EVIDENCE OF THE "CALLER"

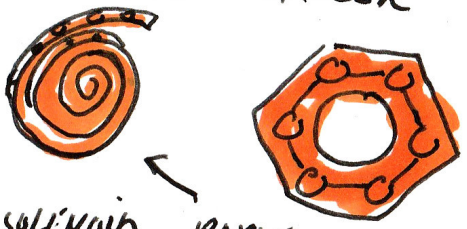

12 VOLT SOLENOID

PAPER POP GUN OR PLASTIC "REVOLVER" CARTRIDGE SHOW EVIDENCE OF FIRING.

Copyright Alex / MechanicalCloud

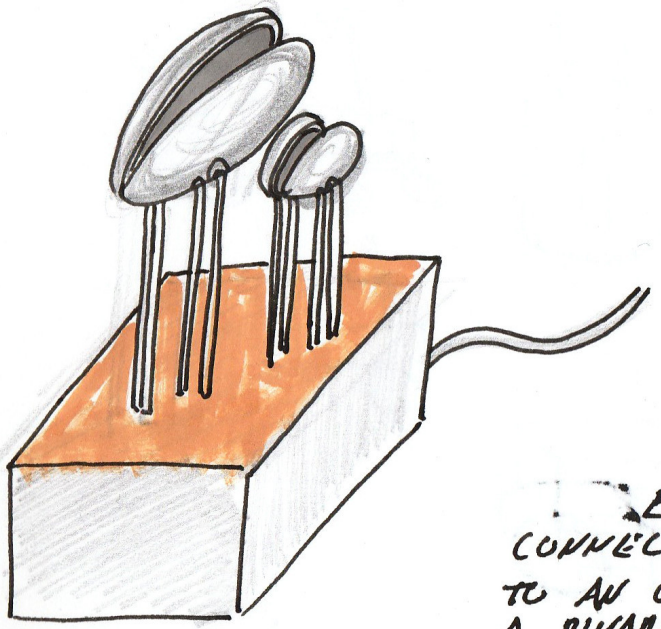

EACH BIVALVE CONNECTS WIRELESS TO AN OUTSIDE STATE A BINARY / YES NO STATE

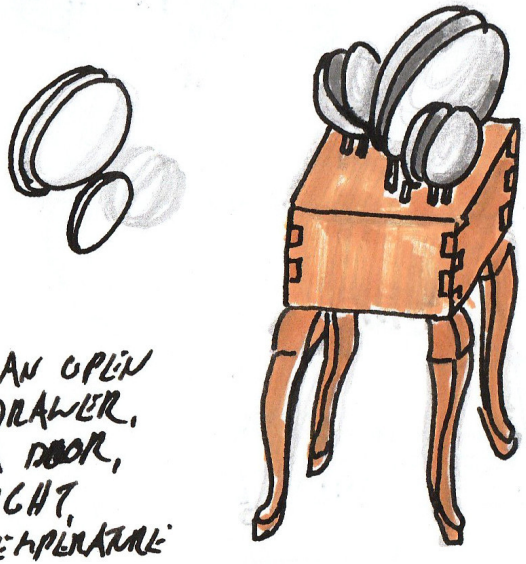

AN OPEN DRAWER, A DOOR, LIGHT, TEMPERATURE

Copyright Alex / MechanicalCloud

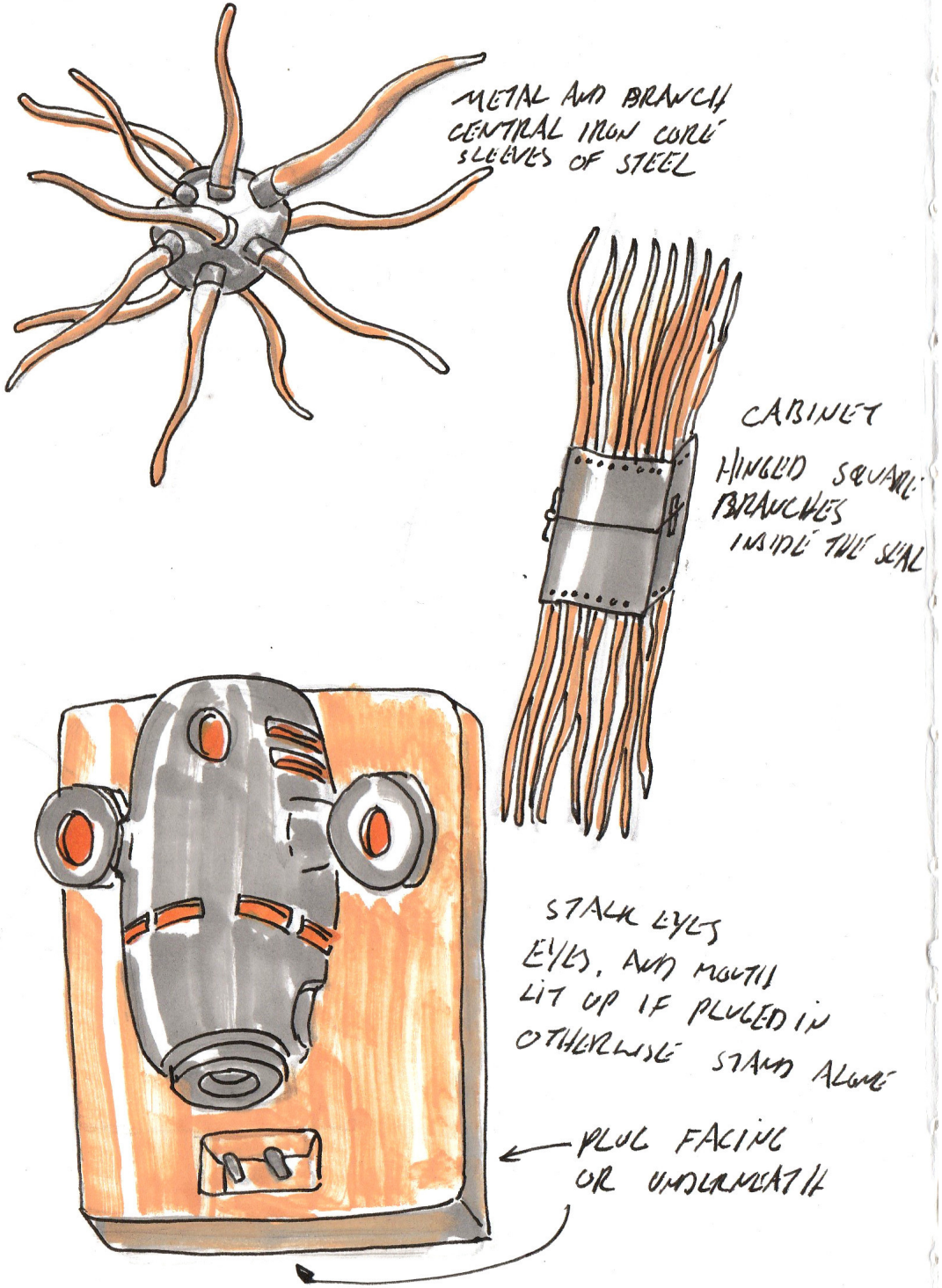

Copyright Alex / MechanicalCloud

THE DANCING
SHADOW
THE INSIDE SELF, THAT
DANCES AND JESTS BEFORE
CATCHING UP

Copyright Alex / MechanicalCloud

IN A LIFETIME

A MAN SPINS

FROM POCKETS FALLS
CAR KEYS AND COINS
FROM HANDS HIS COMB
AND WORDS FALL
OUTWARD
IN A LIFETIME

Copyright Alex / MechanicalCloud